Lum ESCO

Installation Guide

LumVANTA

SAVE THESE INSTRUCTIONS

BEFORE YOU BEGIN

Read and follow all safety instructions

⚠ WARNING

RISK OF FIRE, EXPLOSION AND ELECTRIC SHOCK

- This product should be installed, inspected, and maintained by a qualified electrician only, in accordance with the NEC (National Electric Code) and all local codes.
- Turn off electrical power before inspection, installation or removal.
- Use only UL (or other NTRL) approved wire for input/output connections. Minimum size 18 AWG or 14 AWG for continuous runs.
- Make sure LEDs and drivers are cool to touch when performing maintenance. Make sure the supply voltage is the same as the rated voltage of the luminaire.
- Do not install in a hazardous atmosphere, except where the ambient temperature does not exceed the rated operating temperature of the fixture.
- Keep tightly closed when in operation

Prepare Electrical Wiring

Electrical Requirements

- The LED driver must be supplied with the voltage specified on the product label and connected to an individual, properly grounded branch circuit protected by a 20 Ampere circuit breaker. Use min. 75°C supply.

Grounding Instructions

- The grounding and bonding of the overall system shall be done in accordance with NEC Article 600 and local codes

LumVANTA
LED Wall Light

Installation Guide

Before starting:

- Ensure that the supply power is shut off.
- Unpack the fixture and ensure that there are no damaged or missing parts.
- **NOTE:** Fixture must sealed where it contacts the mounting surface with a silicone sealant.

Tools Required:

Hex Key Set
Wire Strippers
Wire Cutters

Standard Installation

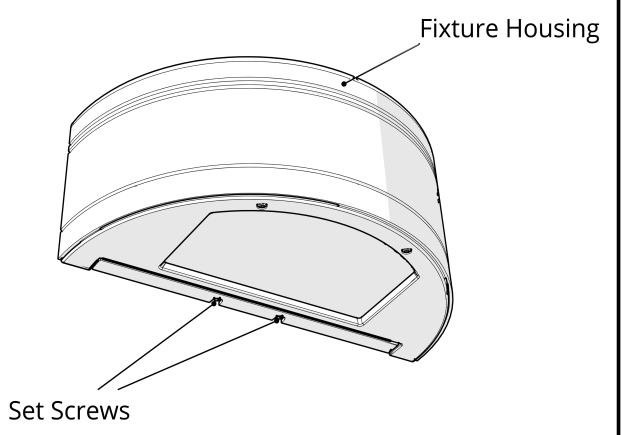

Step 1: Loosen the two (2) set screws found on the bottom of the fixture housing.

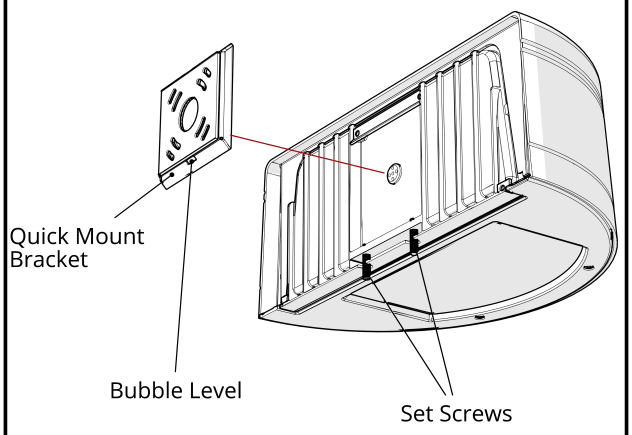

Step 2: Remove the quick mount bracket from the fixture and attach it to the junction box with the appropriate hardware (not included).

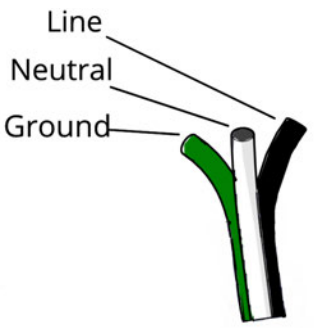

Step 3: Make the wiring connections according to the wiring diagram on Page 4. Push excess wire into the junction box.

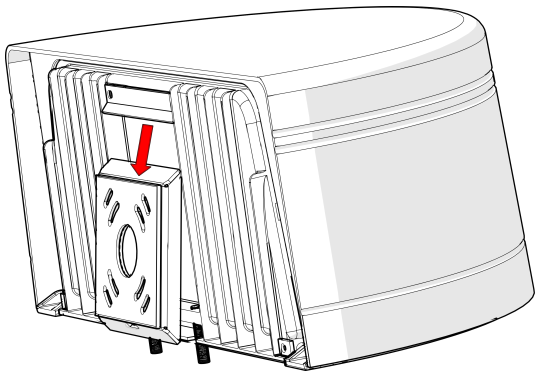

Step 4: Lift the fixture and tilt slightly toward the quick mount bracket. Hook the fixture housing onto the quick mount bracket as shown. Take care not to pinch any wires.

LumVANTA
LED Wall Light

Installation Guide

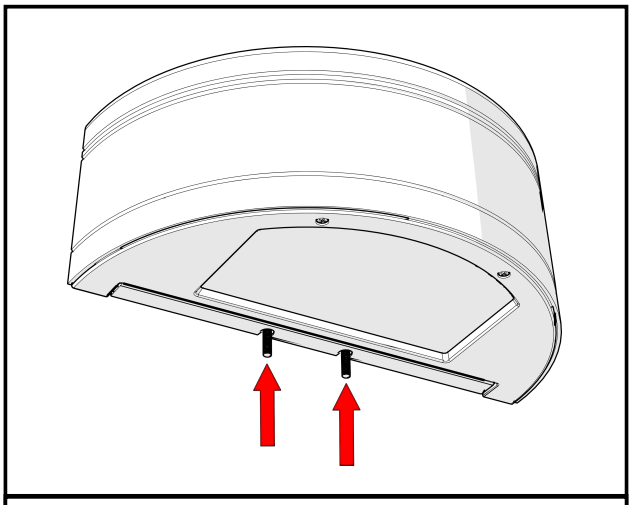

Step 5: Tighten the two (2) set screws to secure the fixture housing to the quick mount bracket.

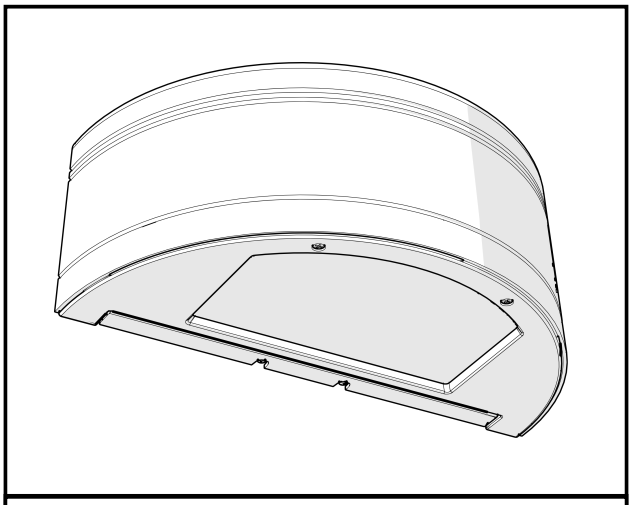

Step 6: Restore power and check that the fixture is functioning properly.

Wattage/CCT Adjustment

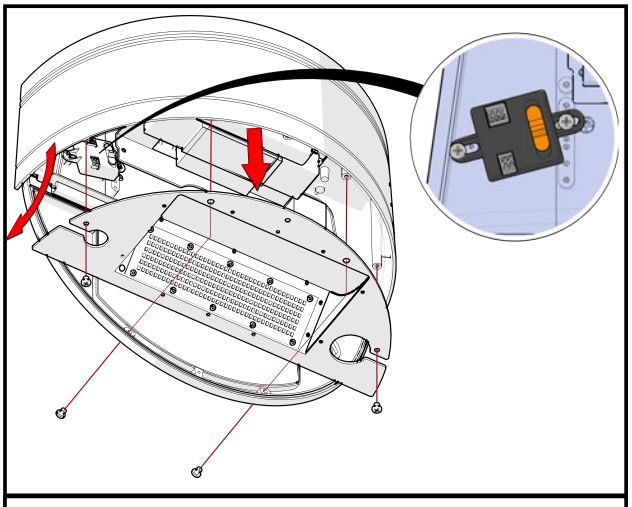

Step 1: With the supply power off, open the bottom cover and carefully detach the LED reflector assembly. Adjust the fixture to the desired wattage and CCT by sliding the switch on the FAO controller.

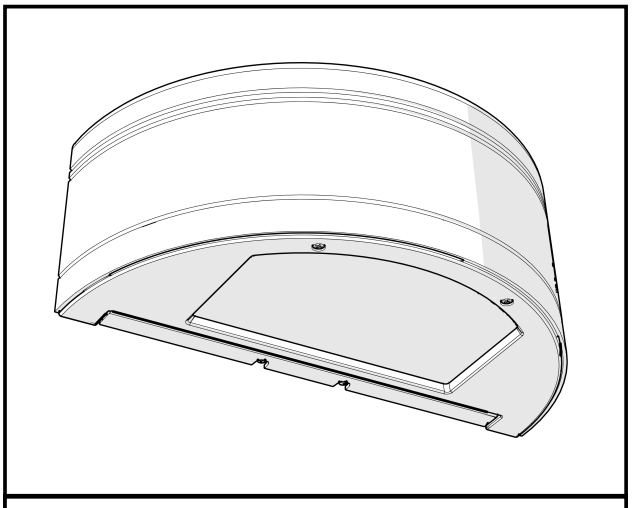

Step 2: Reattach the LED reflector assembly and close the bottom cover. Restore power and check that the fixture is functioning properly.

LumVANTA

LED Wall Light

Installation Guide
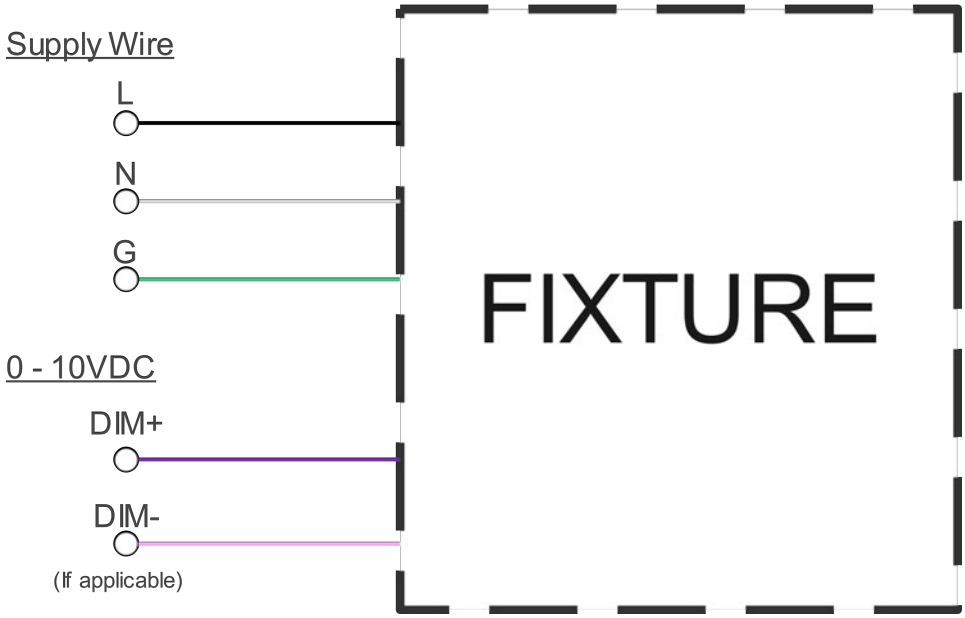
Electrical Wiring Diagram